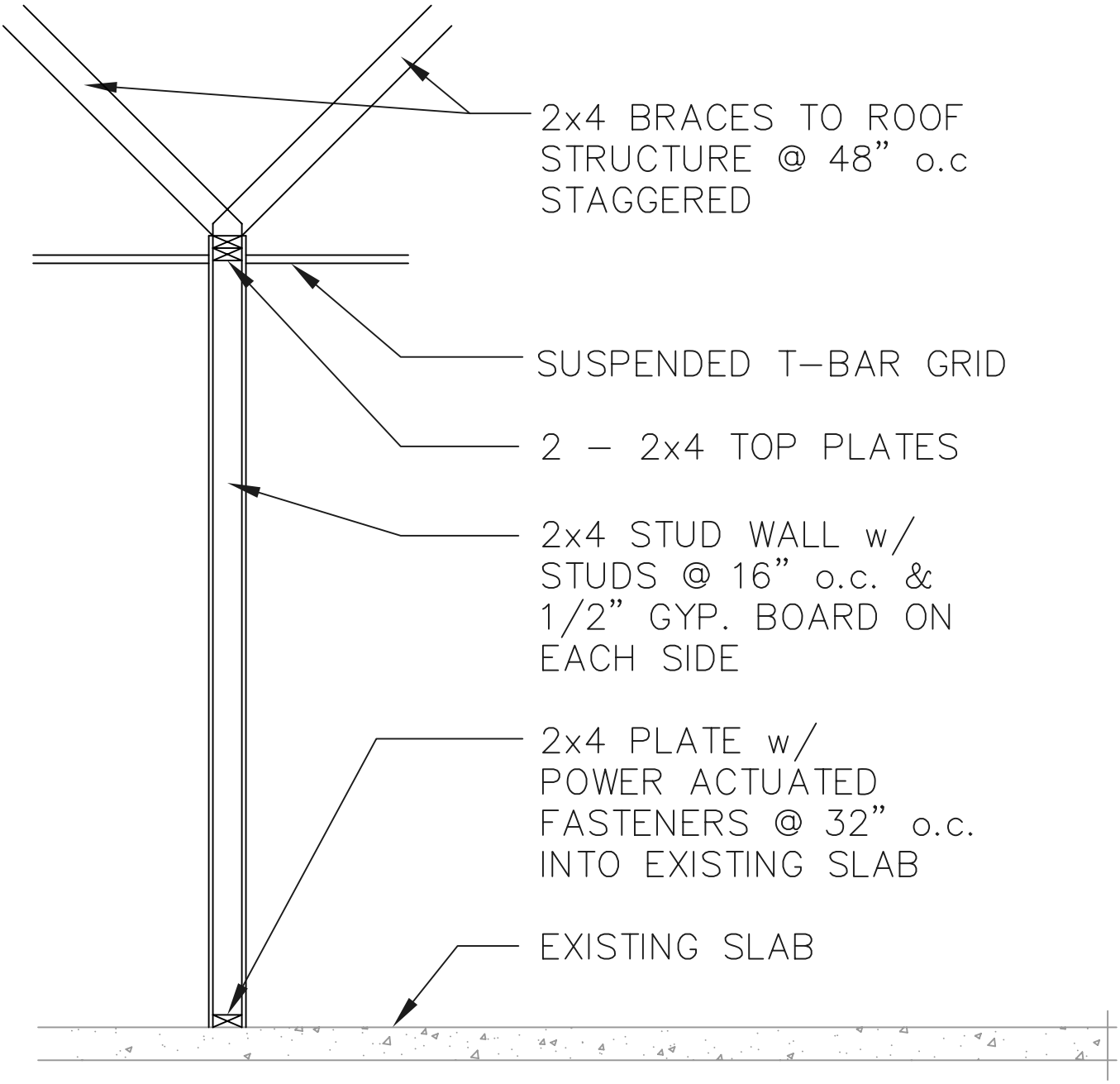

CITY OF VICTORVILLE CALIFORNIA	Development Department Building Division		
	TYPICAL WOOD FRAMING DETAIL		
	14343 Civic Drive Victorville, CA 92393	(760) 955-5100 Fax (760) 269-0072	05/29/2012